DocuSign Envelope ID: 4208B8BC-6874-4A71-B7A4-97C2DE96ADD0

5/14/99

BIO–SWALE DETAILS

PROJECT REFERENCE NO.	SHEET NO.
R-4436DD	2-A
R/W SHEET NO.	___

HYDRAULICS ENGINEER

DocuSigned by: Anthony W. Grubbs 762B7AA0E2E64B9...

NORTH CAROLINA PROFESSIONAL SEAL 034986 ENGINEER ANTHONY W. GRUBBS

3/10/2017

DOCUMENT NOT CONSIDERED FINAL UNLESS ALL SIGNATURES COMPLETED

Stantec

Stantec Consulting Services Inc.
801 Jones Franklin Road
Suite 300
Raleigh, NC 27606
Tel. (919) 851-6866
Fax. (919) 851-7024
www.stantec.com
License No. F-0672

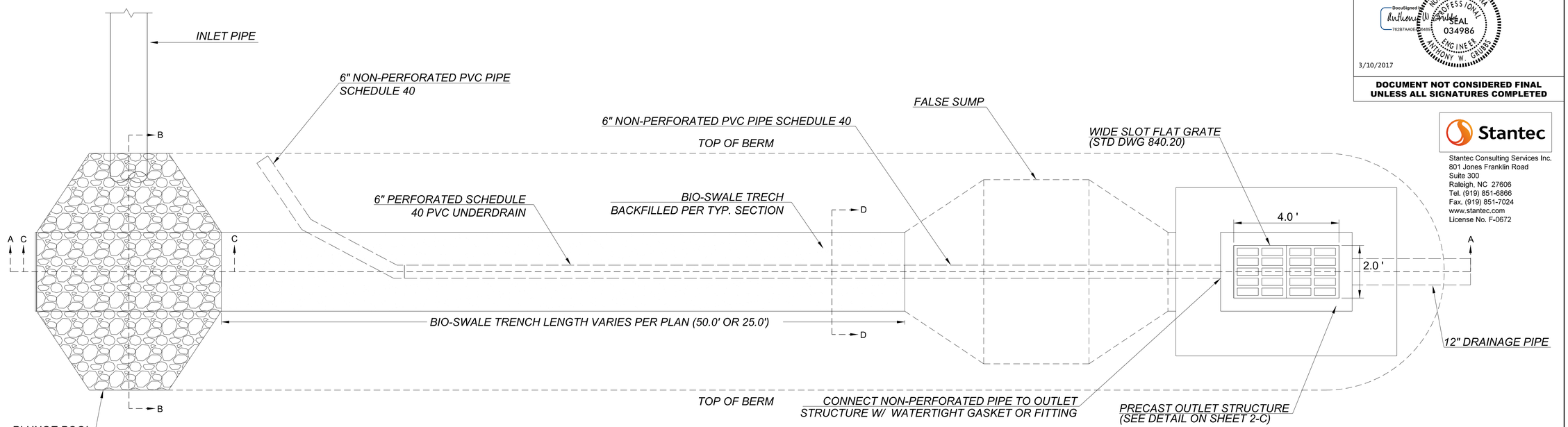

BIO-SWALE TRENCH PLAN (TYP.)
NOT TO SCALE

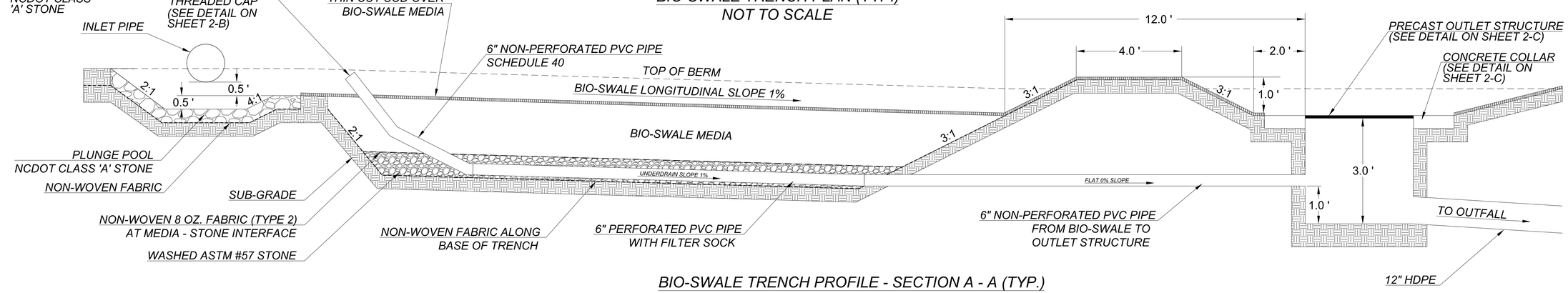

BIO-SWALE TRENCH PROFILE - SECTION A - A (TYP.)
NOT TO SCALE

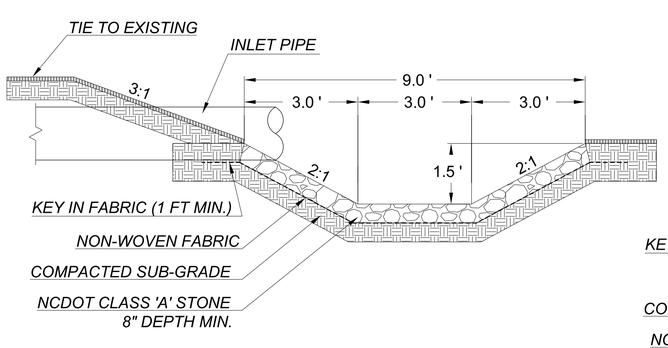

PLUNGE POOL - SECTION B - B (TYP.)
NOT TO SCALE

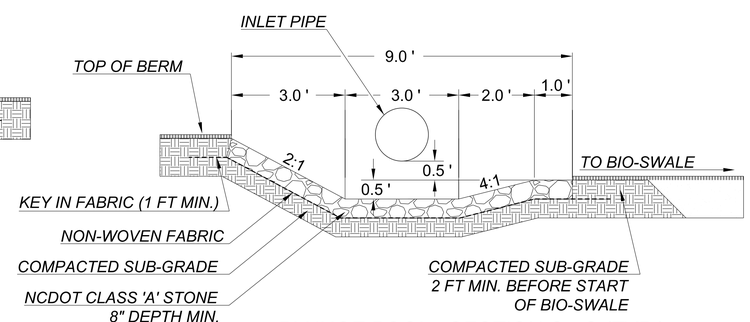

PLUNGE POOL - SECTION C - C (TYP.)
NOT TO SCALE

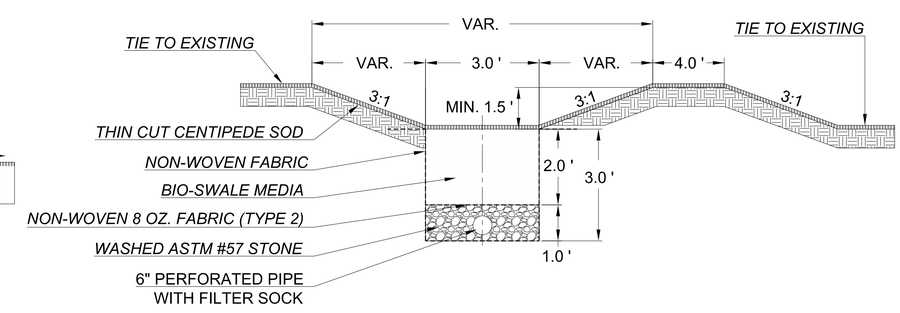

BIO-SWALE TRENCH - SECTION D - D (TYP.)
NOT TO SCALE

3/10/2017
msc files\psh_2-A_Bioswale Details.dgn
fcooper